Seat No.: _____ Enrolment No._____

GUJARAT TECHNOLOGICAL UNIVERSITY

DIPLOMA ENGINEERING – SEMESTER – III• EXAMINATION – SUMMER 2016

Subject Code: 3335501 **Date: 09/05/2016**

Subject Name: Fabrication Drafting

Time: 02:30 PM to 05:00 PM **Total Marks: 70**

Instructions:

1. **Attempt all questions.**
2. **Make Suitable assumptions wherever necessary.**
3. **Figures to the right indicate full marks.**
4. **Use of programmable & Communication aids are strictly prohibited.**
5. **Use of only simple calculator is permitted in Mathematics.**
6. **English version is authentic.**

Q.1	(a)	Draw a typical fabrication drawing and write different general notes written on it.	**07**
	(b)	Draw following riveted joint. 1. Single riveted lap joint 2. Double riveted zigzag lap joint	**07**
Q.2	(a)	Draw neat sketch and label different parts of following process equipment: 1. Pressure vessel 2. Shell and tube heat exchanger	**07**
	(b)	Draw piping-line-diagram and label different piping elements in it. Write application of different piping elements.	**07**
		OR	
	(b)	What is fit? Explain different types of fit with neat sketch.	**07**
Q.3		Draw following views of an object as shown in Fig.1 (i) Front elevation (ii) Full sectional side view (iii) Top Plan	**14**
		OR	
Q.3		Draw by the same method of projection as object shown in Fig. 2 : 1. Sectional Elevation, take section along A-A 2. Bottom Plan 3. L. H. Side View	**14**
Q.4		Draw detail drawing of Cotter joint shown in Fig.3	**14**
		OR	
Q.4		Draw the isometric of machined component from the given F.V. and T.V. in Fig.-4	**14**
Q.5		Draw development of object shown in Fig.5	**14**
		OR	
Q.5		Two equal size pipes, diameter 65 mm, main pipe vertical and branch pipe inclined at $30^{0}$to horizontal are connected with their axes intersecting. Draw projections of connected pipes, when plane containing two axes is parallel to V.P. Discuss the nature of the curve.	**14**

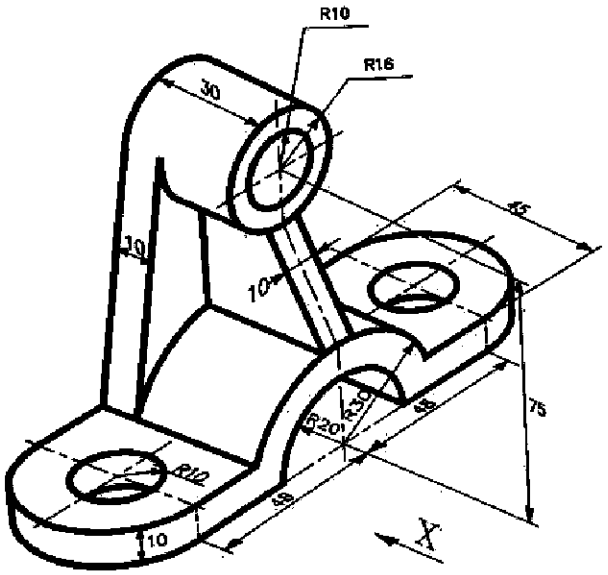

Fig.- 1 All Dimensions are in mm

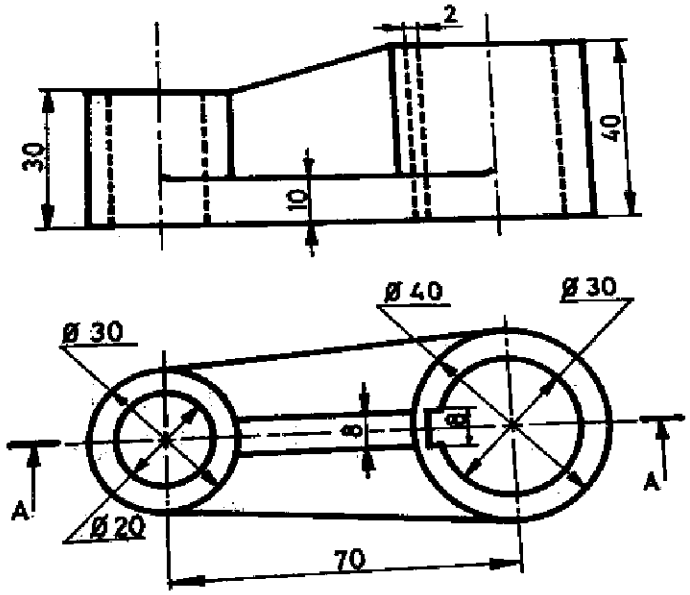

Fig.- 2 All Dimensions are in mm

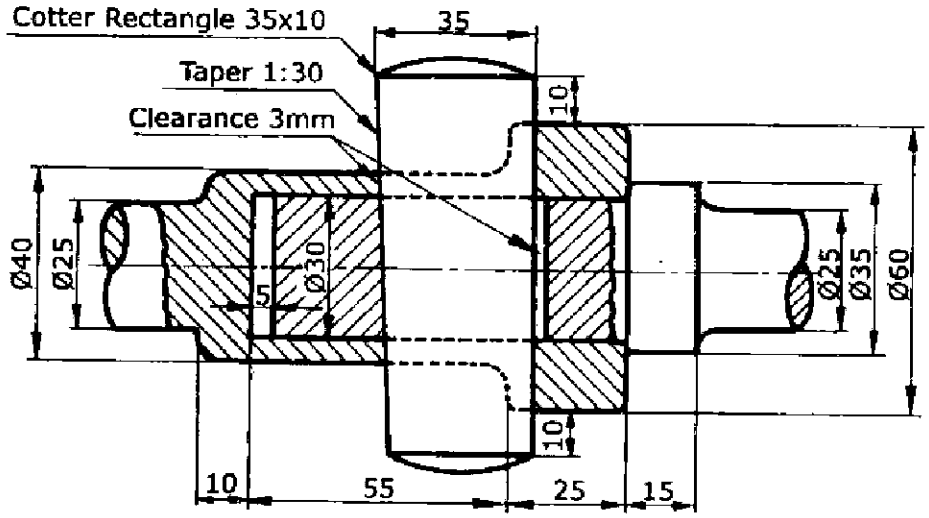

Fig.- 3 All Dimensions are in mm

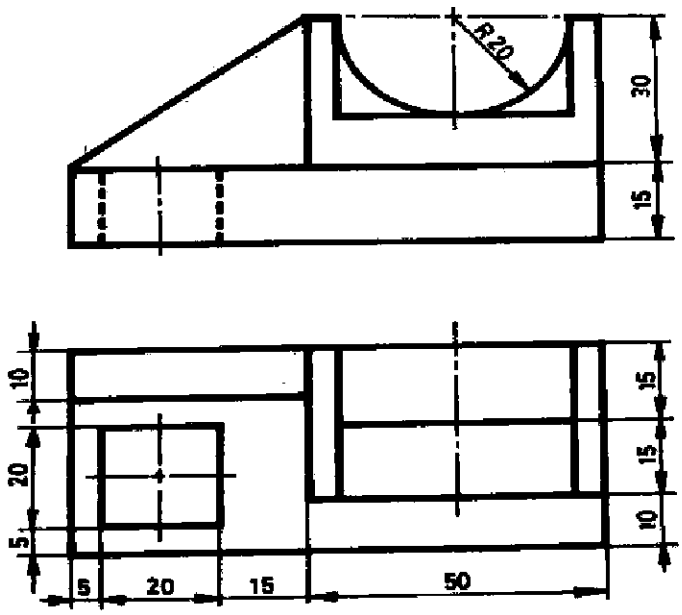

Fig.- 4 All Dimensions are in mm

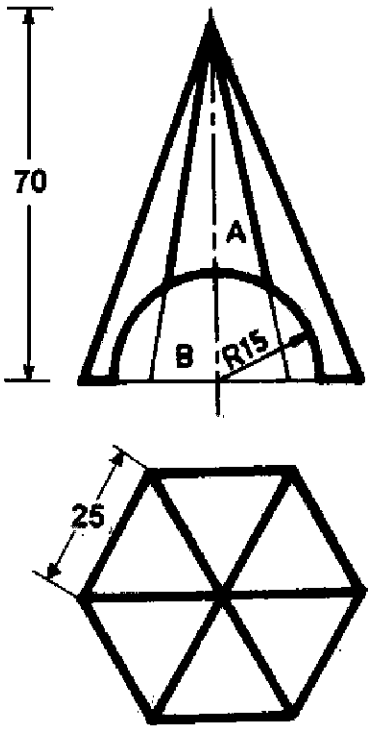

Fig.- 5 All Dimensions are in mm

****